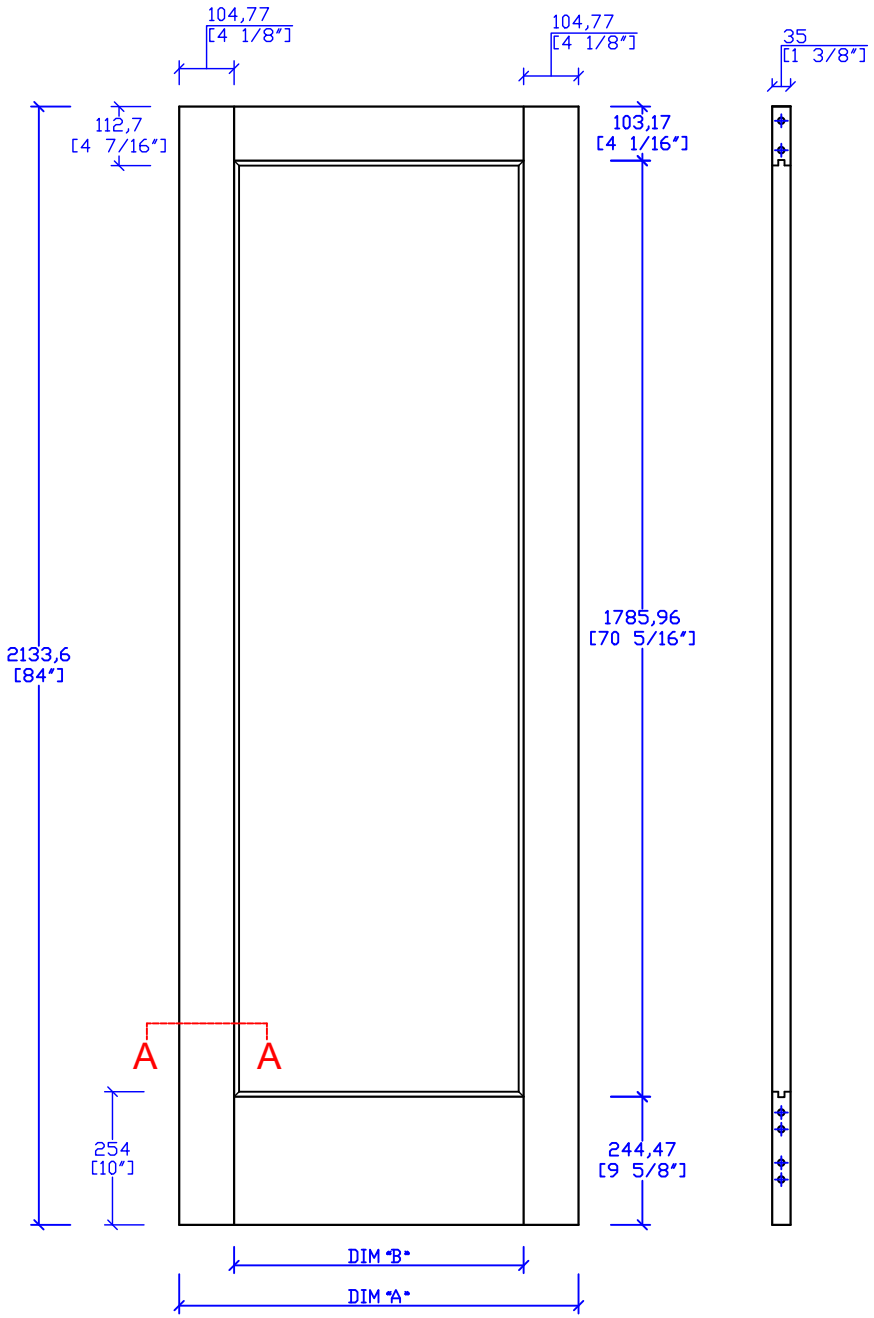

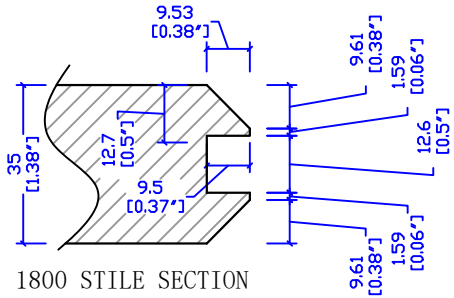

1800 STILE SECTION

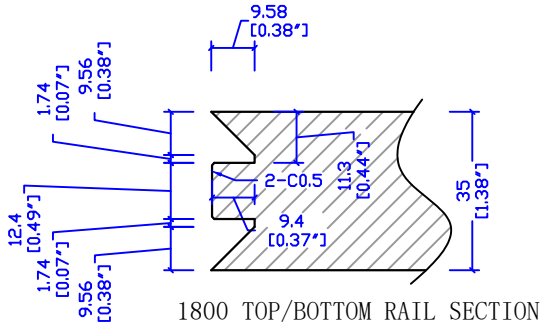

1800 TOP/BOTTOM RAIL SECTION

PANEL CONTROL DIMENSIONS

DIM "A"	DIM "B"	PANEL SIZE
406.4(1-4")	196.8	194x1783
457.2(1-6")	247.6	244x1783
508(1-8")	298.5	295x1783
558.8(1-10")	349.2	346x1783
609.6(2-0")	400	397x1783
660.4(2-2")	450.8	447x1783
711.2(2-4")	501.6	500x1783
762(2-6")	552.4	550x1783
812.8(2-8")	603.2	600x1783
863.6(2-10")	654	650x1783
914.4(3-0")	704.8	700x1783
965.2(3-2")	755.6	753x1783

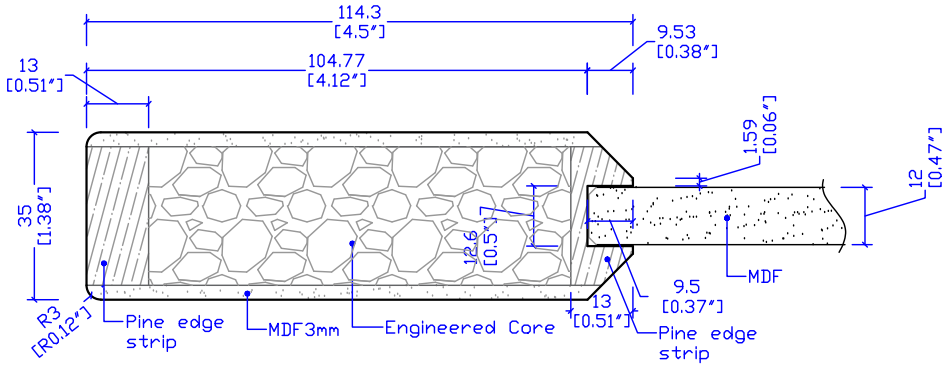

1800EC SECTION A-A

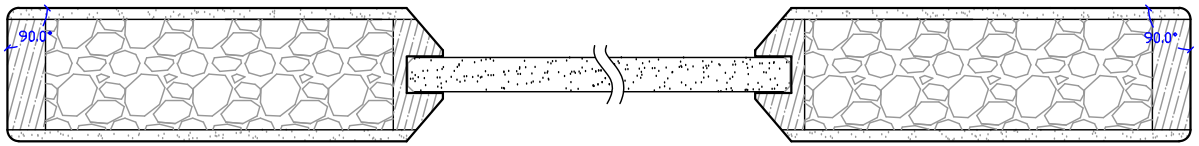

THIS DRAWING AND THE INFORMATION CONTAINED HEREIN IS PROPRIETARY TO TRIMLITE COMPANY AND SHALL NOT BE REPRODUCED, COPIED OR DISCLOSED IN WHOLE OR PART, OR USED FOR MANUFACTURE OR FOR ANY OTHER PURPOSE WITHOUT THE WRITTEN PERMISSION OF TRIMLITE COMPANY.

Rev. #	Description	Date	by Whom
A		2025.11.1	Wang

TITLE: 1801ECBR10

(1-3/8"x7-0")Pri

DRAWING NO. T-1801ECBR10 84"-35

LAYOUT | SCALE NTS | DIMENSIONS ARE IN mm/[in "]

DRAWN BY: | DATE

TRIMLITE